ARMANI / Roca

Built-in component for shower for intimate hygiene with built-in progressive mixer

Ref. A5251636..

This built-in component for intimate hygiene shower (Ref. A5258824..) provides excellent functionality to bathroom spaces that do not include a bidet. This component is nickel-plated.

Application place: Bidet
Flow rate (l/min - 3 bar): 2.5
Installation type: Built-in, Wall-mounted

Colours and Finishes

How to obtain the reference number
Replace the “..” with the desired finish code from the list below

- 00 Chrome
- VC Greige
- VG Nero
- VS Brushed steel

Optional

A346767... Wall-hung WC
A801762... Soft-closing Supralit® lacquered seat and cover for wall-hung WC

Compatible with

A5258824.. Visible component for shower for intimate hygiene with built-in progressive mixer

Technical drawings

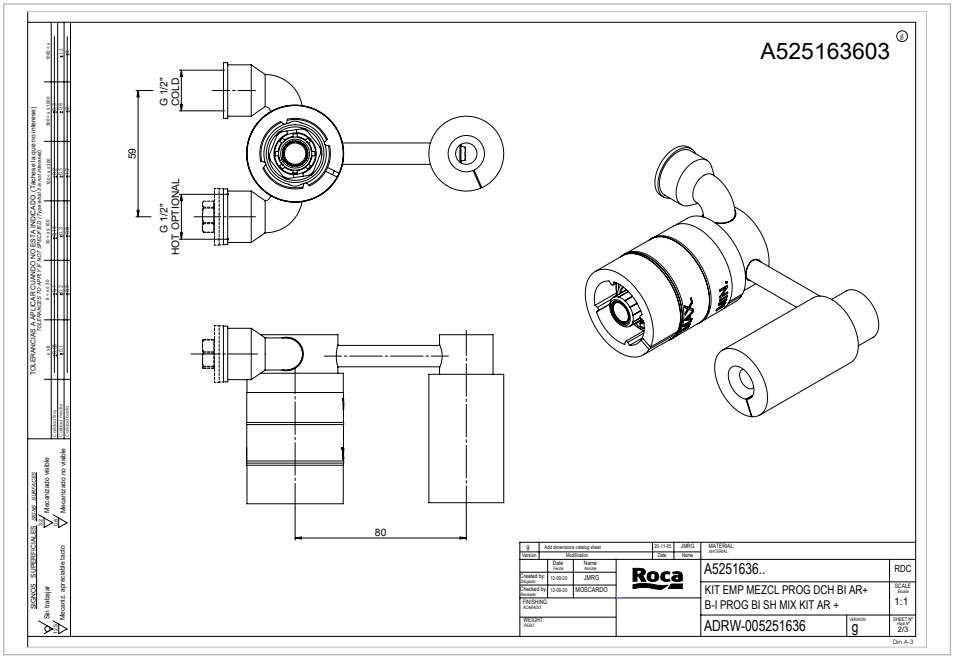

© Copyright 2018, Armani / Roca Sanitario, S.A. - All rights reserved

ARMANI / Roca

Built-in component for shower for intimate hygiene with built-in progressive mixer

Ref. A5251636..

© Copyright 2018, Armani / Roca Sanitario, S.A. - All rights reserved